Робототехника | Лего | Ардуино | Уроки

Едем по линии

WeDo2

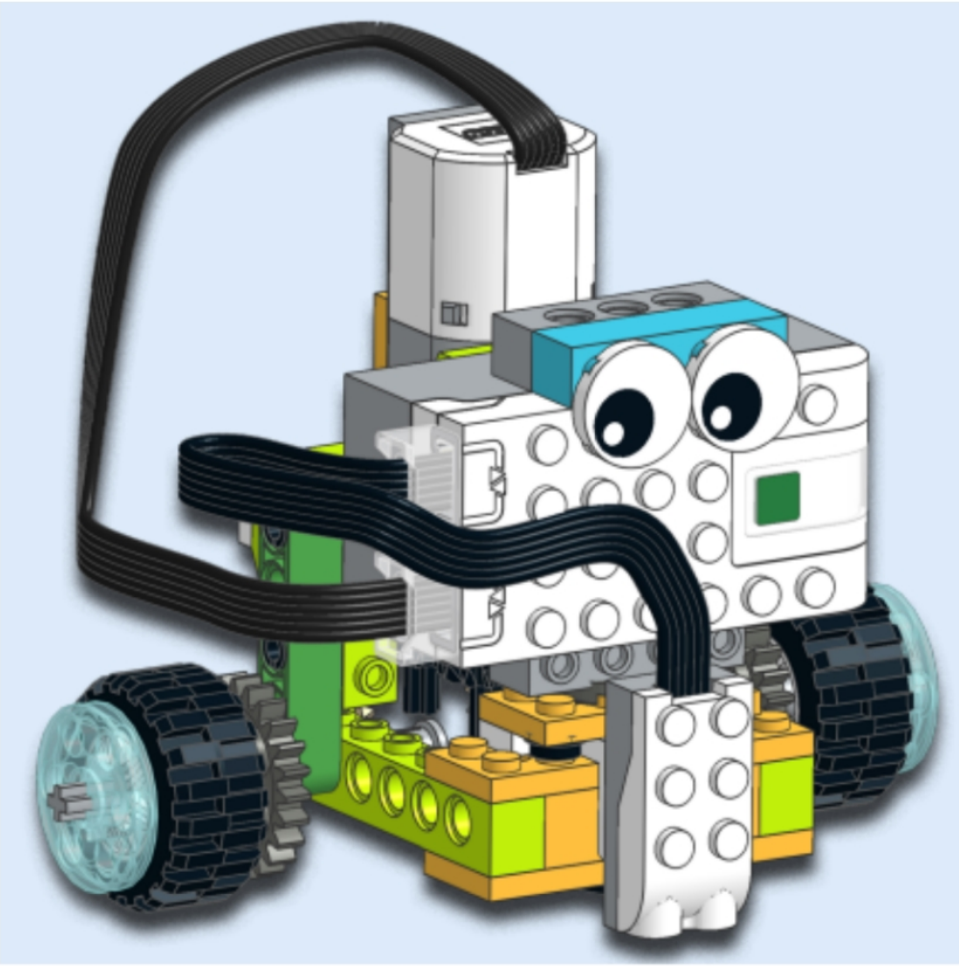

1

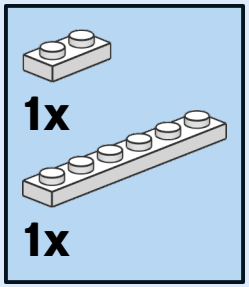

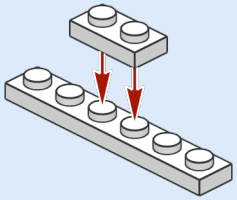

2

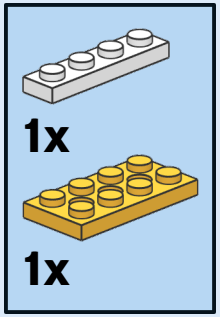

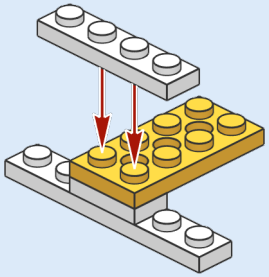

3

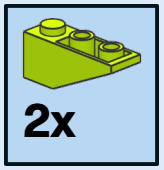

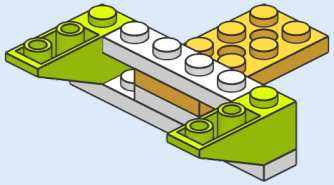

4

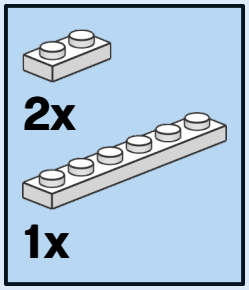

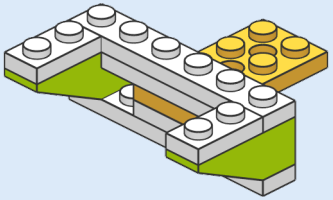

5

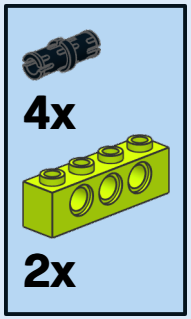

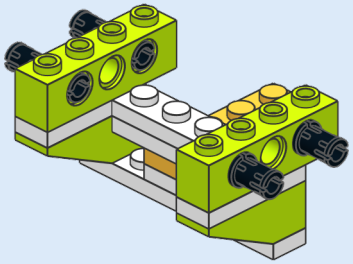

6

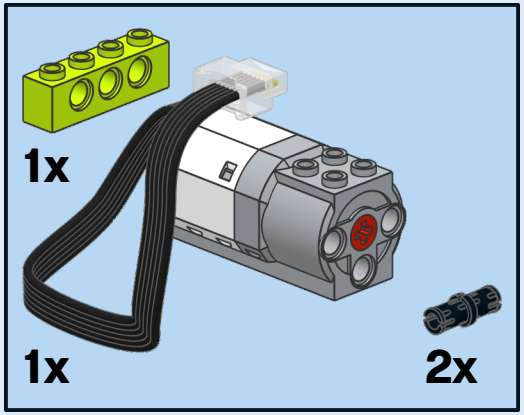

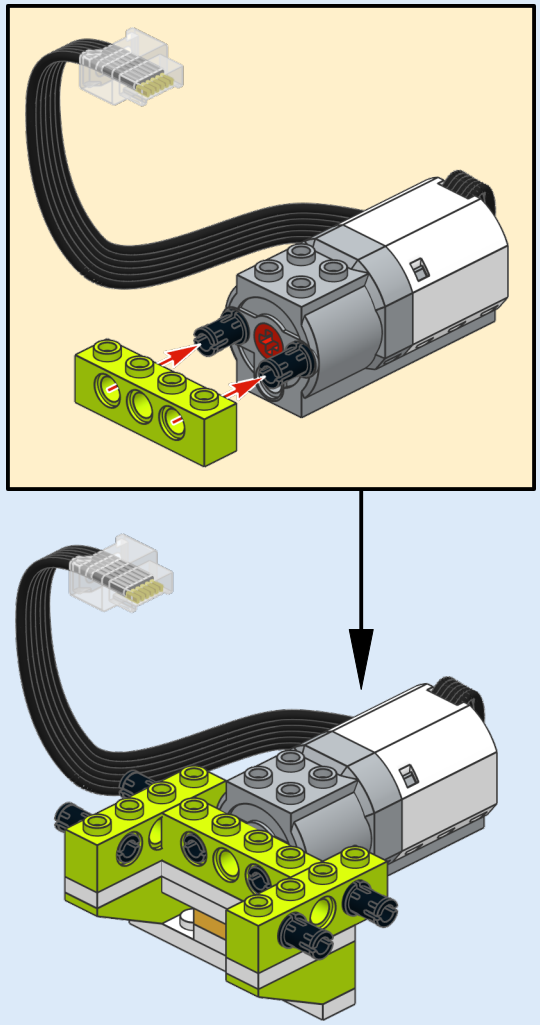

7

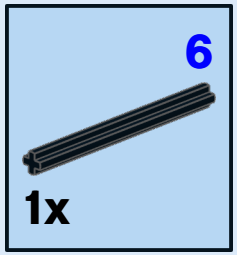

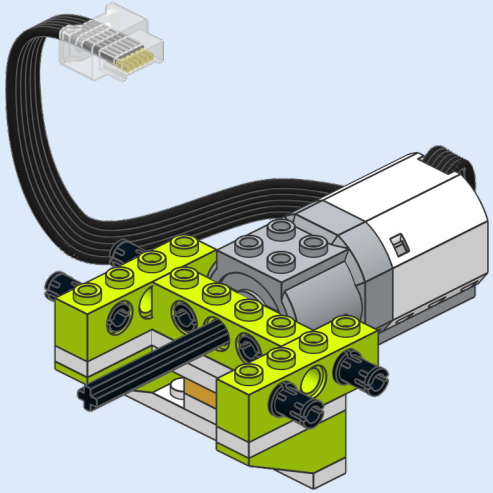

8

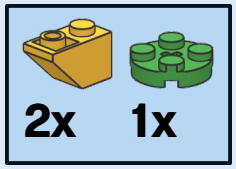

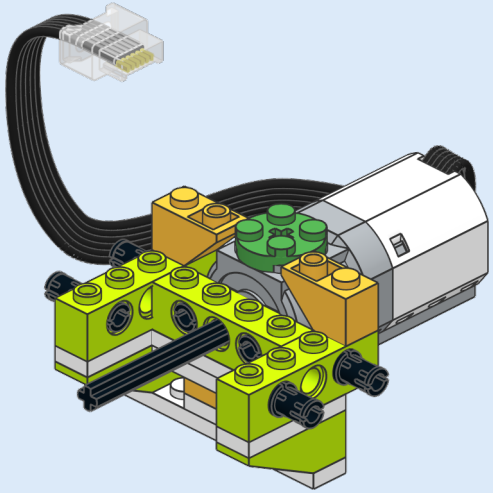

9

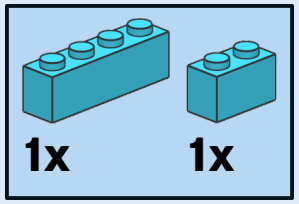

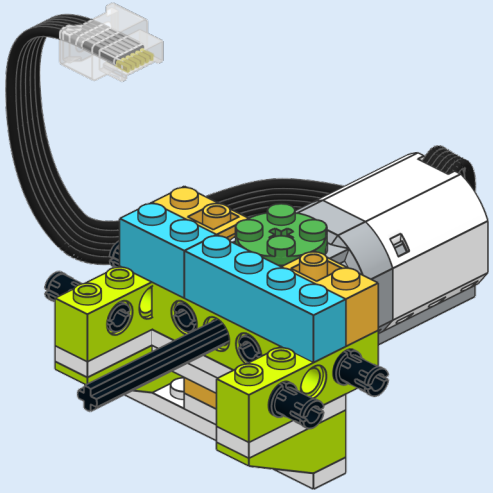

10

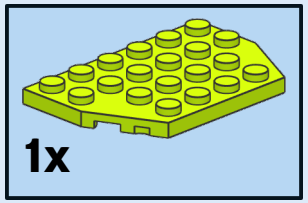

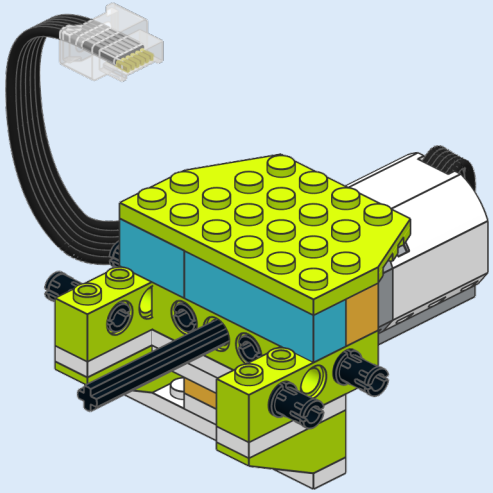

11

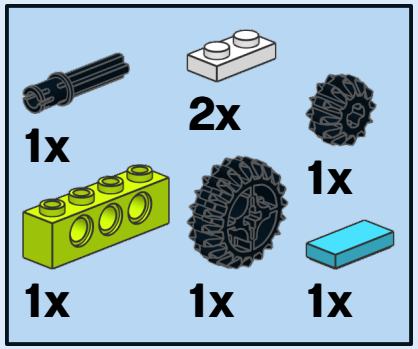

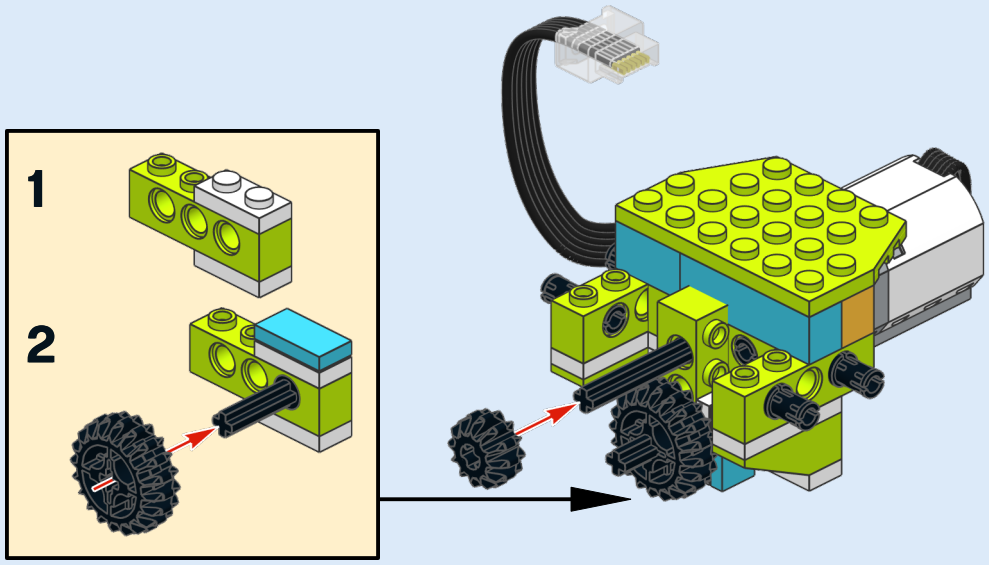

12

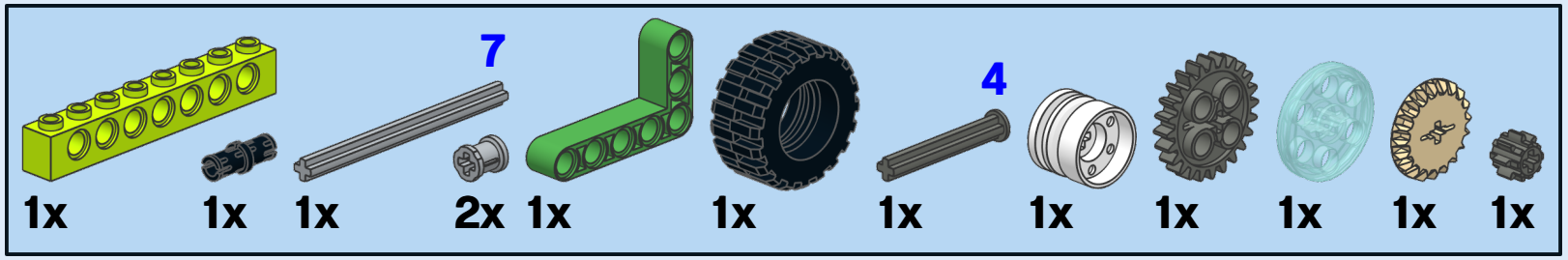

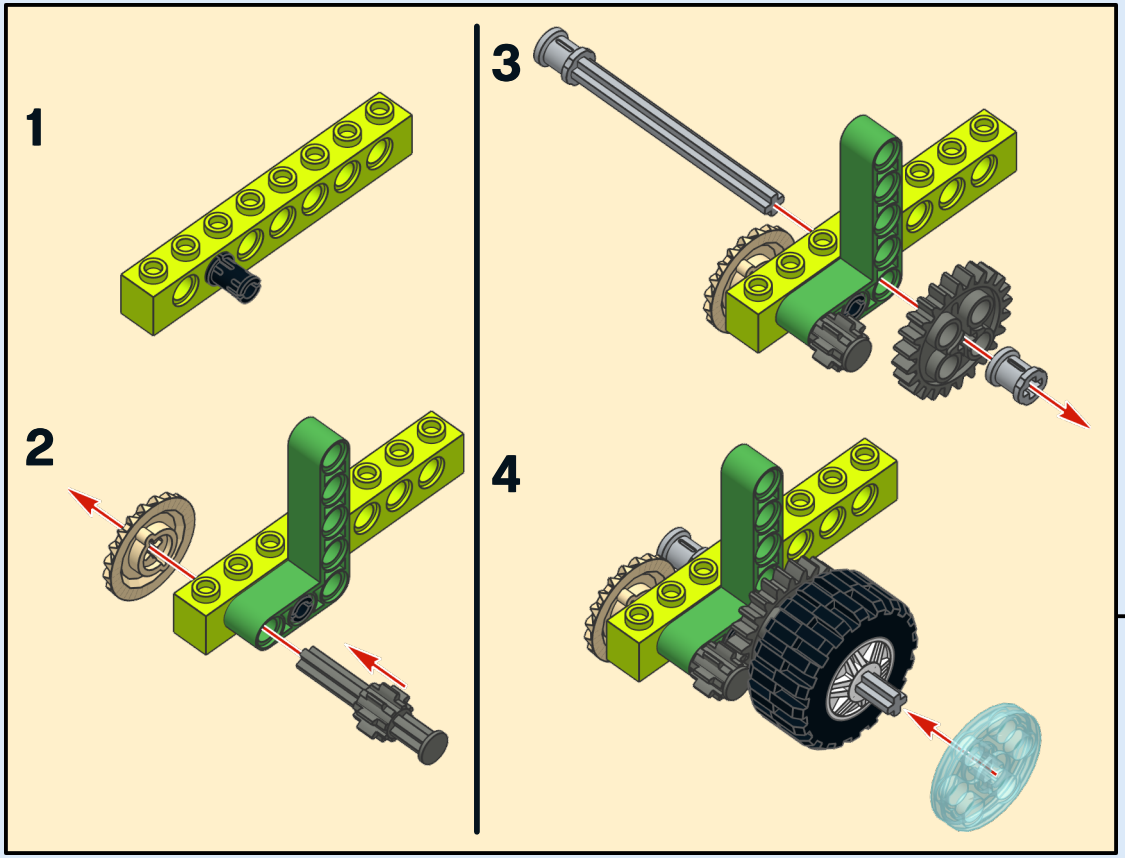

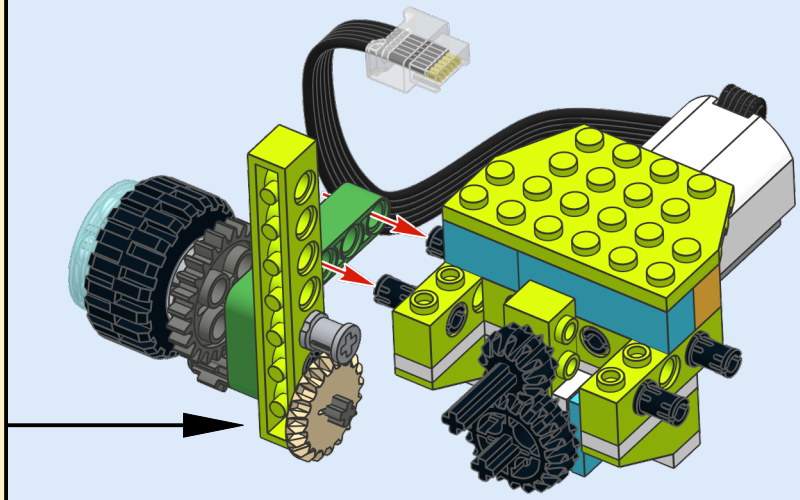

13

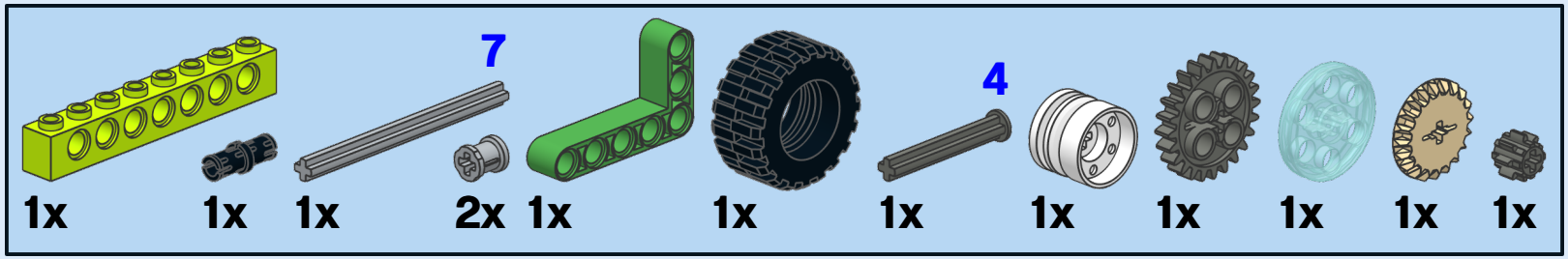

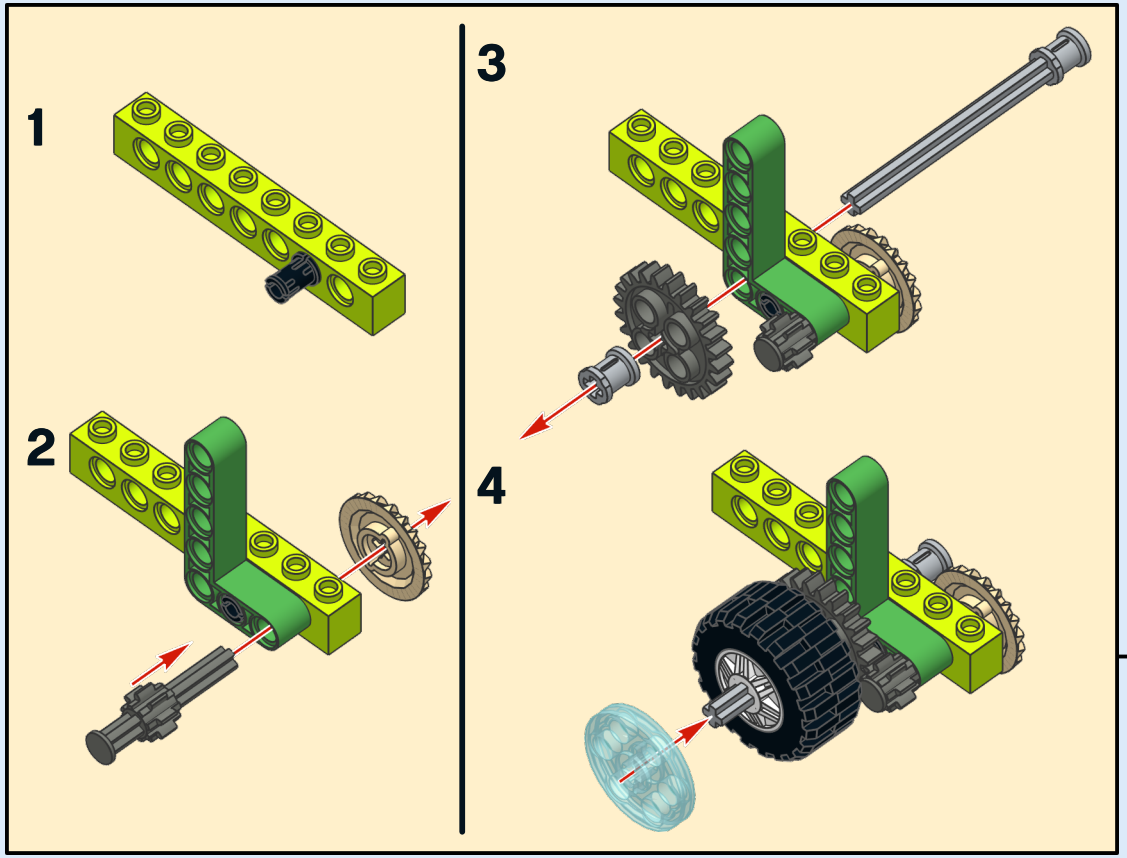

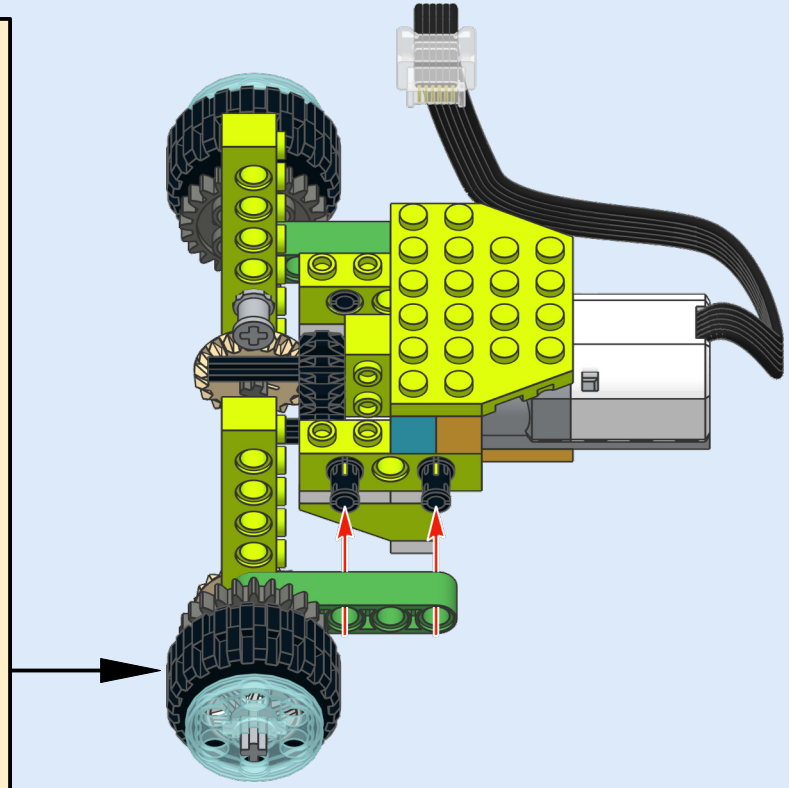

14

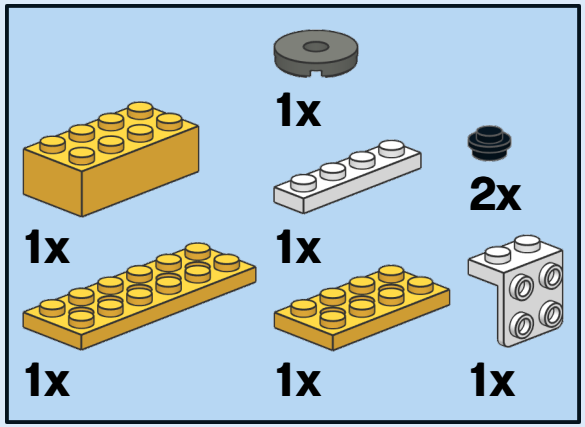

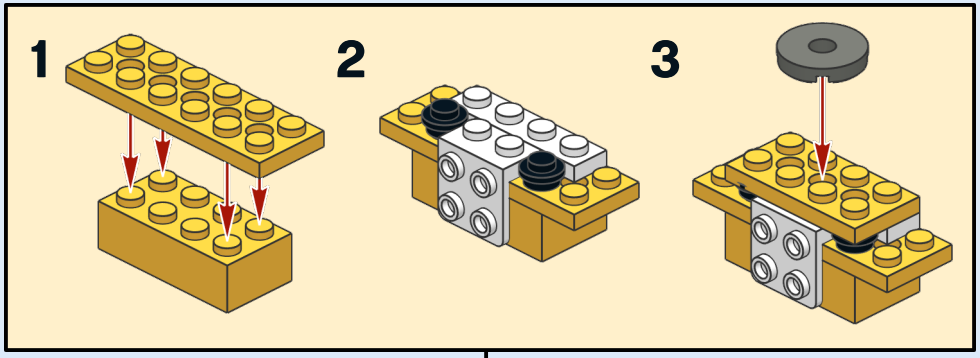

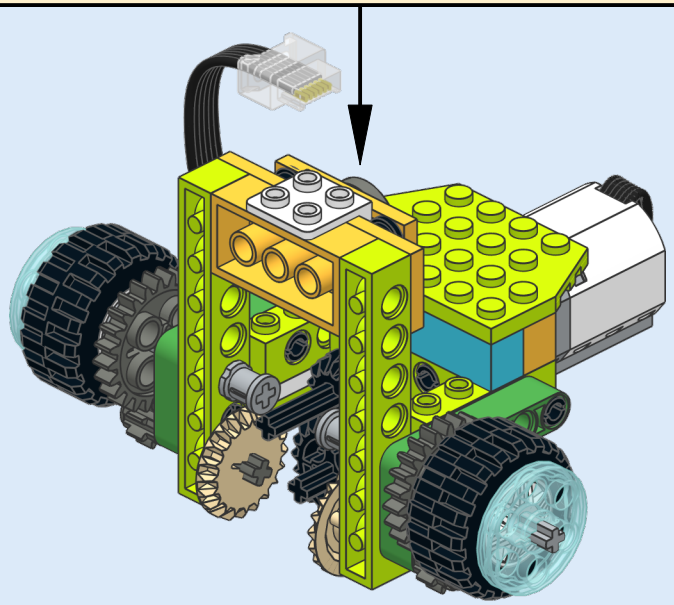

15

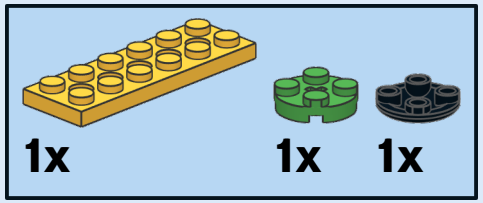

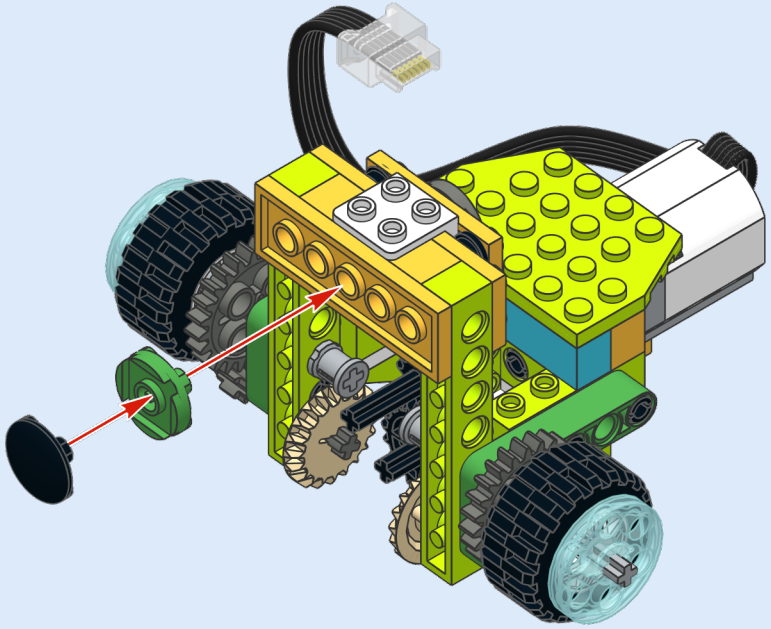

16

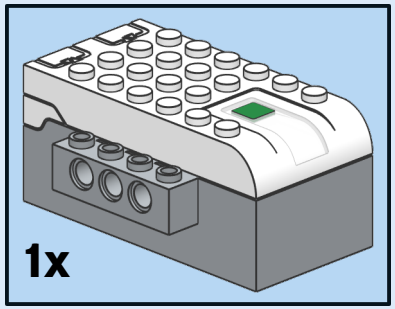

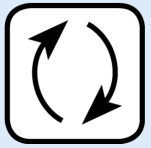

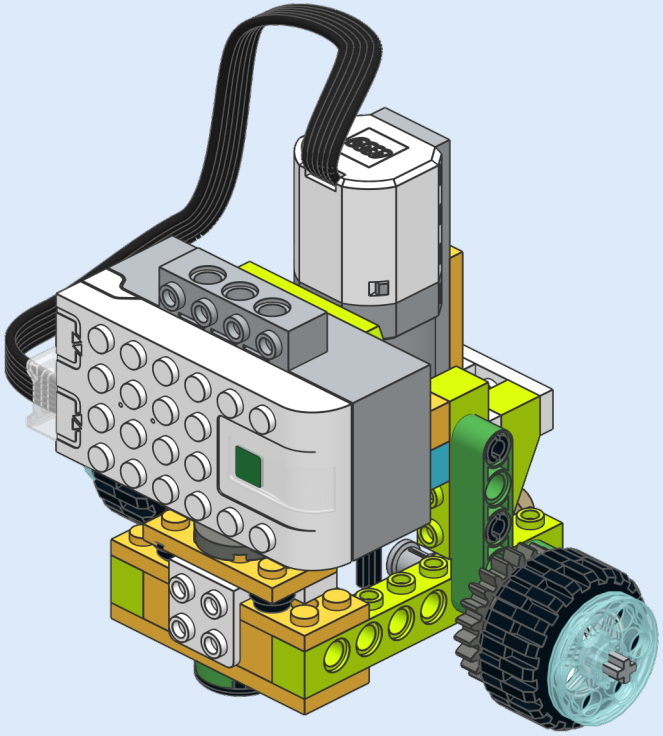

17

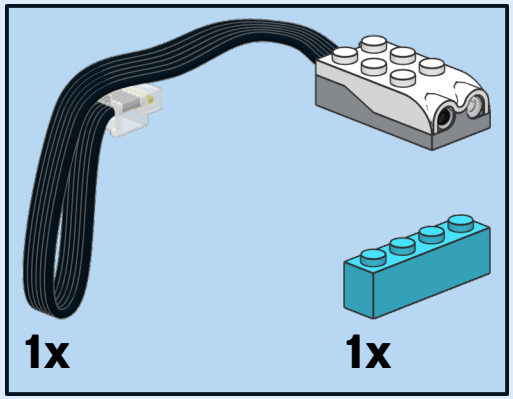

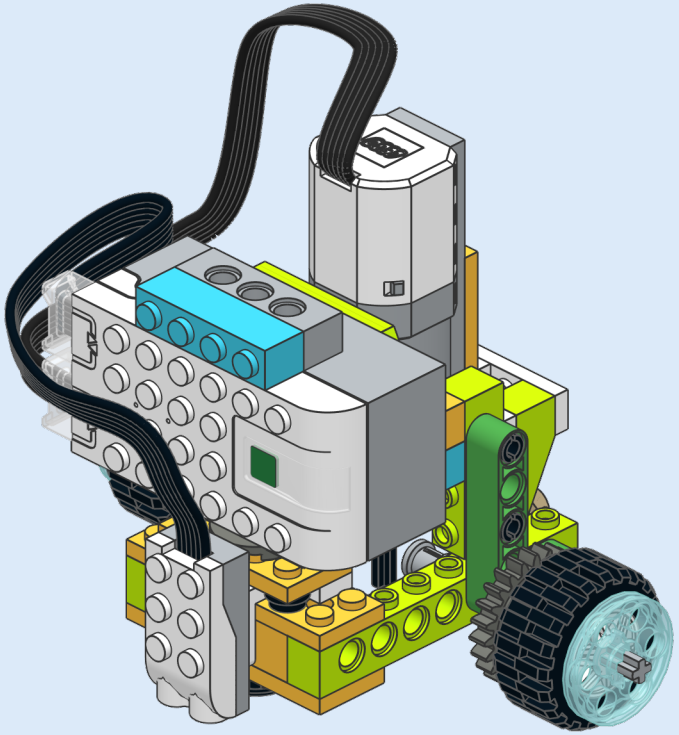

18

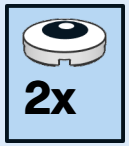

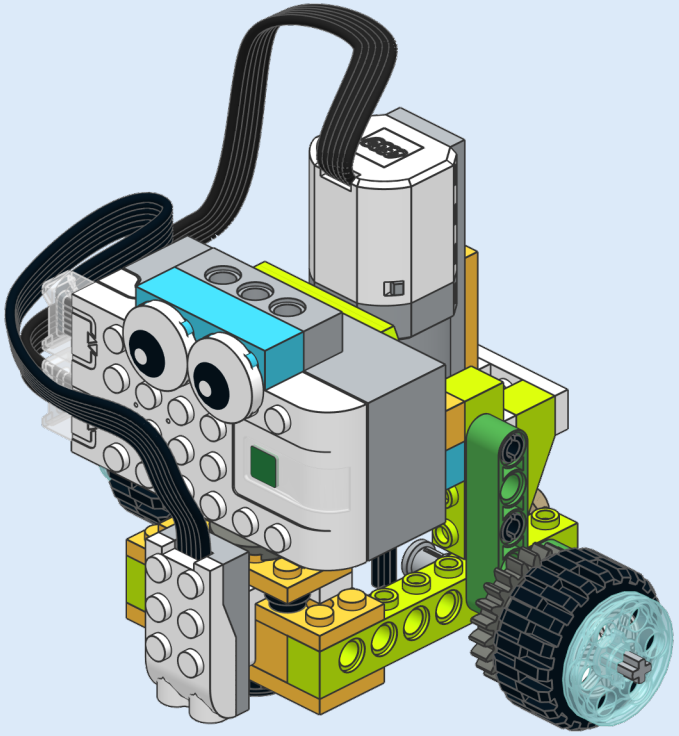

Line follower program

detecting dark line: steer towards white surface

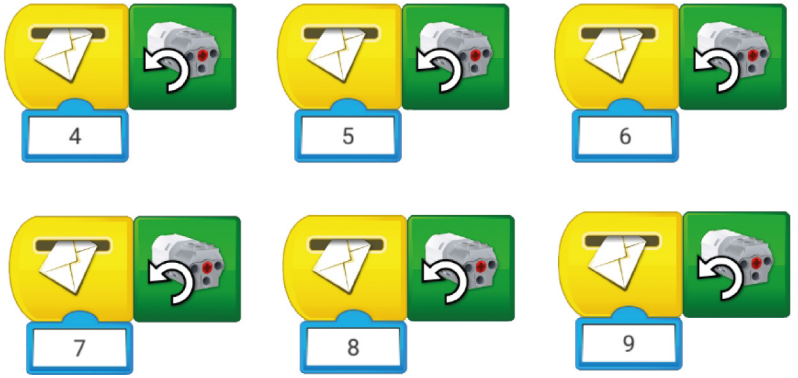

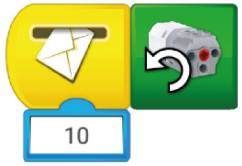

detecting white surface: steer towards the line

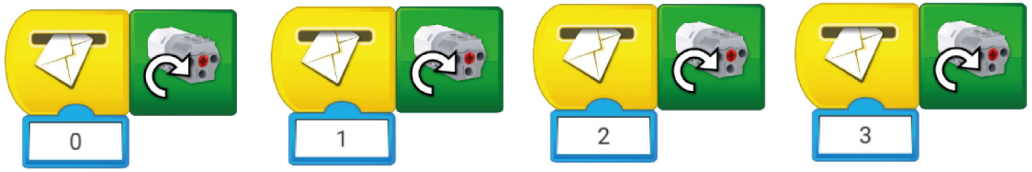

Remote control program